ADC Lab Logbook

Part 4 | Section 5: The Complete Op-Amp

Section 5: The Complete Op-Amp

Architecture and Circuit Description

Circuit Overview

The complete op-amp integrates three cascaded stages: a Long-Tailed Pair (LTP) differential input stage, a Common-Emitter (CE) amplifier stage with degeneration, and a class AB push-pull power amplifier output stage. The bias current for the power amplifier is shared with the CE stage tail current source, eliminating a separate bias network. This shifts the power amplifier input node to the collector of T_4, a difference of only ~0.7 V — equivalent to less than 1 mV referred to the op-amp input.

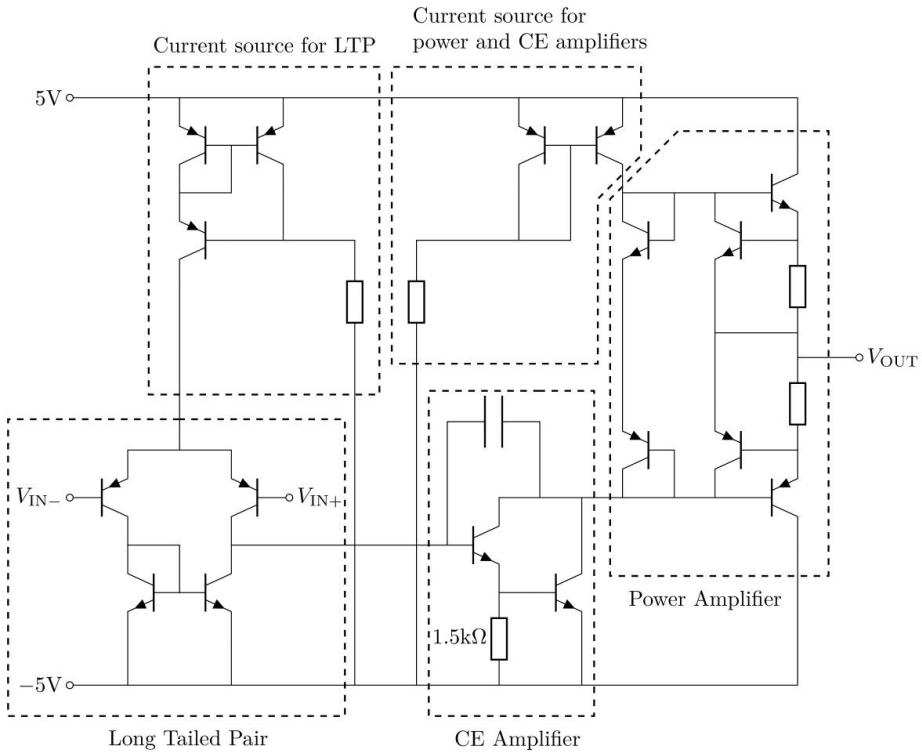

Input Polarity

The CE stage introduces a 180° phase inversion. To maintain overall negative feedback, V_{in+} and V_{in-} are swapped relative to a direct-coupled LTP. Without this exchange, the feedback would be positive and the output would saturate.

Initial Test at Unity Gain

Voltage Follower Configuration

The op-amp was configured as a unity-gain voltage follower (V_{out} connected back to V_{in-}). A white-noise behavioural voltage source was applied to V_{in+} to simulate physical noise and prevent metastability in simulation:

$$V = white(2\times10^{8} \times time) / 1000$$

Without the compensation capacitor, a 50 µs transient simulation shows sustained large-amplitude

oscillation (hundreds of millivolts) rather than the expected sub-millivolt noise tracking. This confirms that the uncompensated op-amp is unstable in unity-gain configuration.

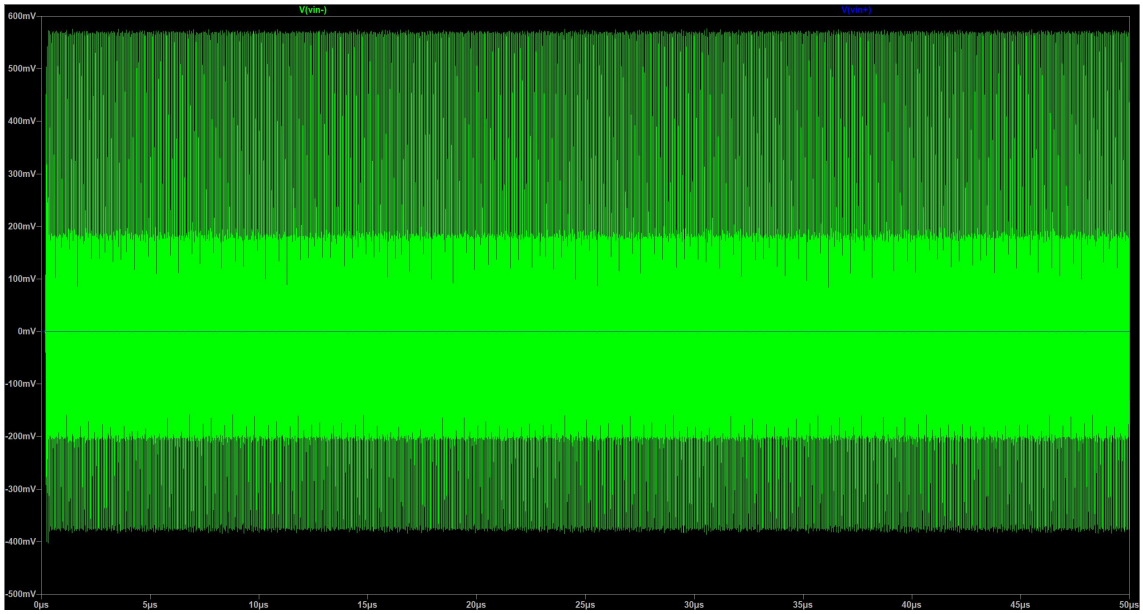

Open-Loop Transfer Function

AC Analysis Configuration

The op-amp was configured for open-loop AC analysis using a 1 F capacitor (DC short, AC open) in the feedback path with a 100 kΩ resistor. This maintains correct DC biasing while presenting maximum impedance at signal frequencies, allowing the full open-loop gain to be measured without output saturation.

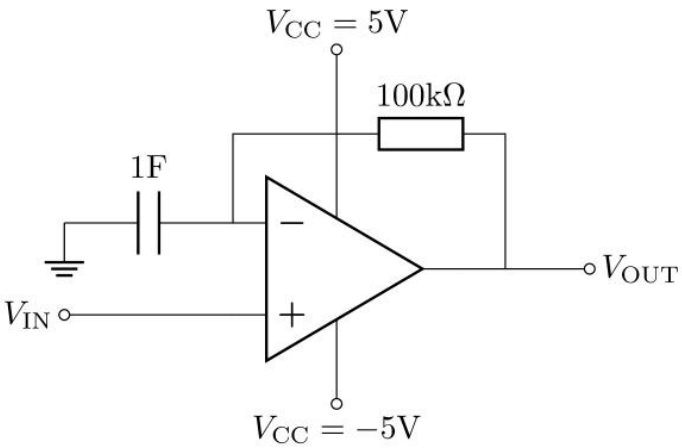

Results

Open-loop DC gain: 115.8 dB, in line with the design intention of exceeding 100 dB. This validates the infinite-gain approximation used in standard op-amp circuit analysis.

As frequency increases, the gain rolls off due to parasitic transistor capacitances (primarily the collector-base capacitance). The phase margin was determined from the Bode plot:

$$PM = \varphi - (-180°)$$

Without compensation, the phase at the 0 dB crossing is −230°, giving a phase margin of −50°. A negative phase margin confirms instability: the phase lag reaches 180° while the gain is still well

above 0 dB, causing negative feedback to become positive feedback and sustaining oscillation.

Frequency Compensation

Compensation Strategy

Miller compensation is applied by connecting a capacitor Cc across the CE stage. The Miller effect multiplies Compensation capacitance by the CE stage voltage gain ($1 + A_V$), creating a dominant low-frequency pole that causes the open-loop gain to reach 0 dB before the accumulated phase lag reaches 180°.

Capacitor Selection

Starting with Compensation capacitance = 1 nF, the capacitance was increased until a small but positive phase margin was achieved:

C = 1 nF: Phase = −230.2°, PM = −50.2° (unstable)

C = 100 nF: Phase = −224°, PM = −44° (unstable)

C = 10 µF: Phase = −210.7°, PM = −30.7° (unstable)

C = 60 µF: Phase = −179.5°, PM = +0.5° (marginally stable)

C = 100 µF: Phase = −162°, PM = +18° (stable)

A value of 60 µF provides the minimum positive phase margin (+0.5°). With this capacitor fitted, the unity-gain noise test confirmed stable operation: the output amplitude is comparable to the noise input (<1 mV). The large capacitance required reflects the high open-loop gain of the discrete CE stage; in an integrated circuit, a much smaller on-chip capacitor suffices because the per-stage gain is lower.

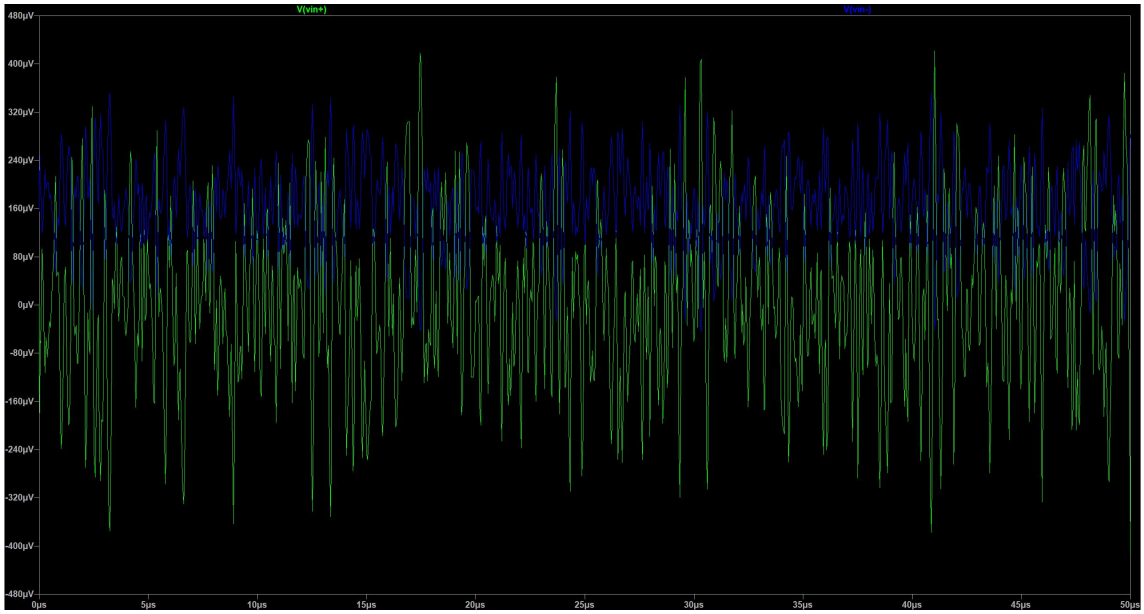

Input Offset Voltage

Measurement

A DC operating point simulation was performed with the compensated op-amp configured as a unity-gain voltage follower and the input set to 0 V. The LTspice operating point confirmed:

V(vin+) = 164.6 µV, V(vin−) = 0 V

Input offset voltage V_o = 164.6 µV.

In unity-gain configuration, this offset appears directly at the output. If the op-amp were operated open-loop, the equivalent output error would be $V_o \times A_o^L$, which greatly exceeds the supply voltage. This explains why a DC feedback path is essential during open-loop AC testing. The offset originates from transistor mismatch in the LTP differential pair.

Inverting Amplifier

Circuit Configuration

The op-amp was configured as an inverting amplifier with R_{in} = 1 kΩ and R_F = 10 kΩ.

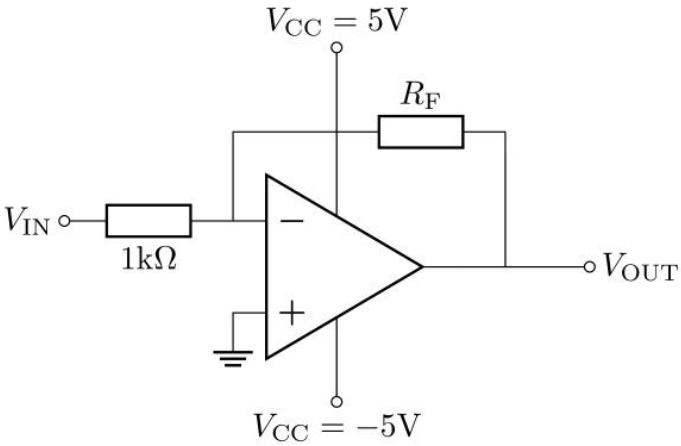

The expected closed-loop gain is:

$$A_V = -R_F / R_{in} = -10 \;\; (20\ dB)$$

A transient simulation with a 1 kHz, 10 mV sinusoidal input confirmed an output amplitude of approximately 100 mV, in agreement with theory. A DC offset of ~20 mV was observed at the output, consistent with the input offset voltage amplified by the noise gain (1 + R_F/R_{in} = 11).

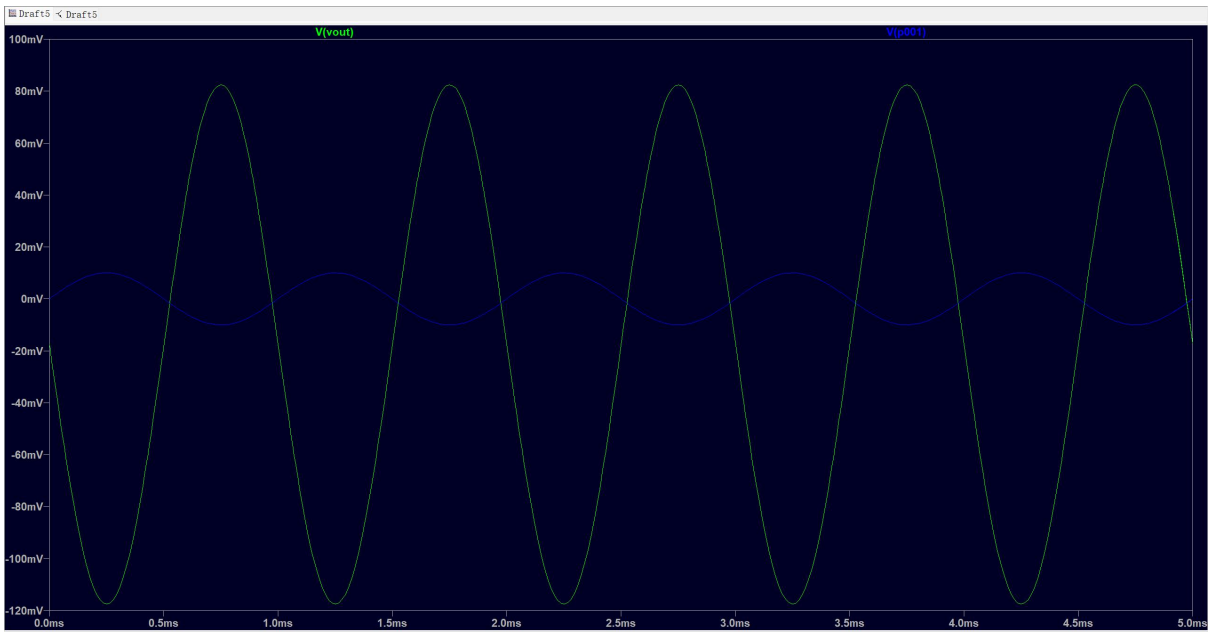

Gain-Bandwidth Product

A parametric AC sweep was performed using the SPICE directive:

.step param rfb list 1k 10k 100k 1Meg

The overlaid transfer functions confirm that all curves converge at high frequencies, a hallmark of a single-pole-compensated amplifier. The gain-bandwidth product was determined from the 0 dB crossings:

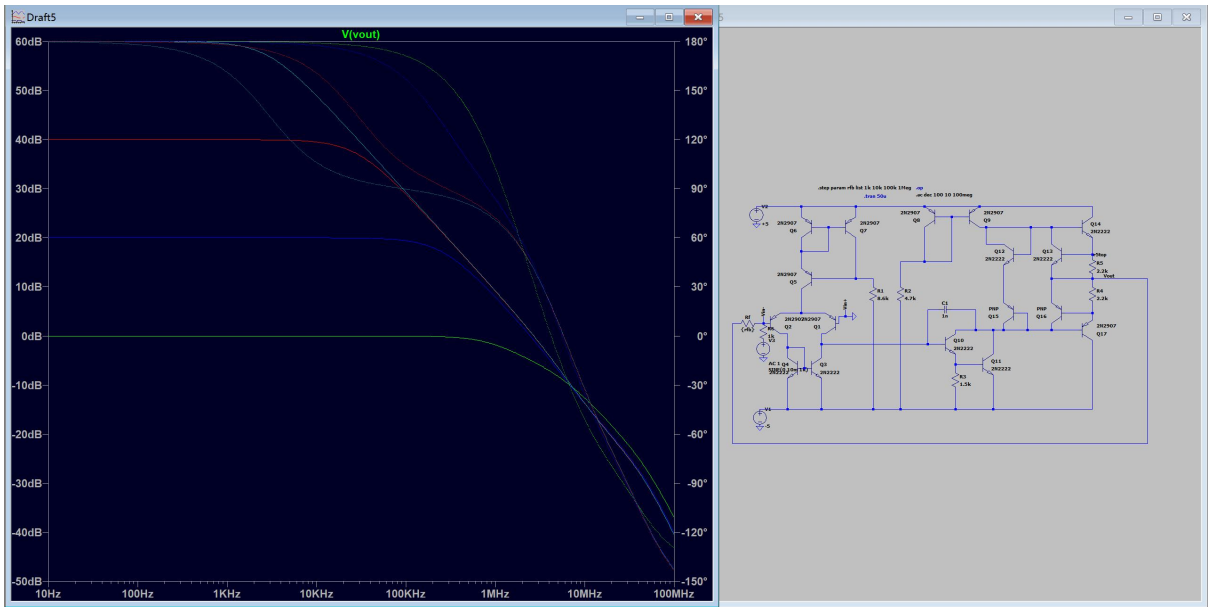

R_F = 1 kΩ (0 dB): $f_{0\ dB}$ = 2.63 MHz ➡ GBW ≈ 2.63 MHz

R_F = 10 kΩ (20 dB): $f_{0\ dB}$ = 292.4 kHz ➡ GBW ≈ 2.92 MHz

R_F = 100 kΩ (40 dB): $f_{0\ dB}$ = 29.2 kHz ➡ GBW ≈ 2.92 MHz

R_F = 1 MΩ (60 dB): $f_{0\ dB}$ = 2.91 kHz ➡ GBW ≈ 2.91 MHz

The GBW product is approximately 2.9 MHz and is consistent across all gain settings. The unity-gain measurement gives a slightly lower value because near the compensation frequency, second-order poles and transistor parasitics distort the ideal single-pole roll-off, making the 0 dB crossing an imprecise estimate of GBW. The higher-gain measurements provide a more reliable determination.